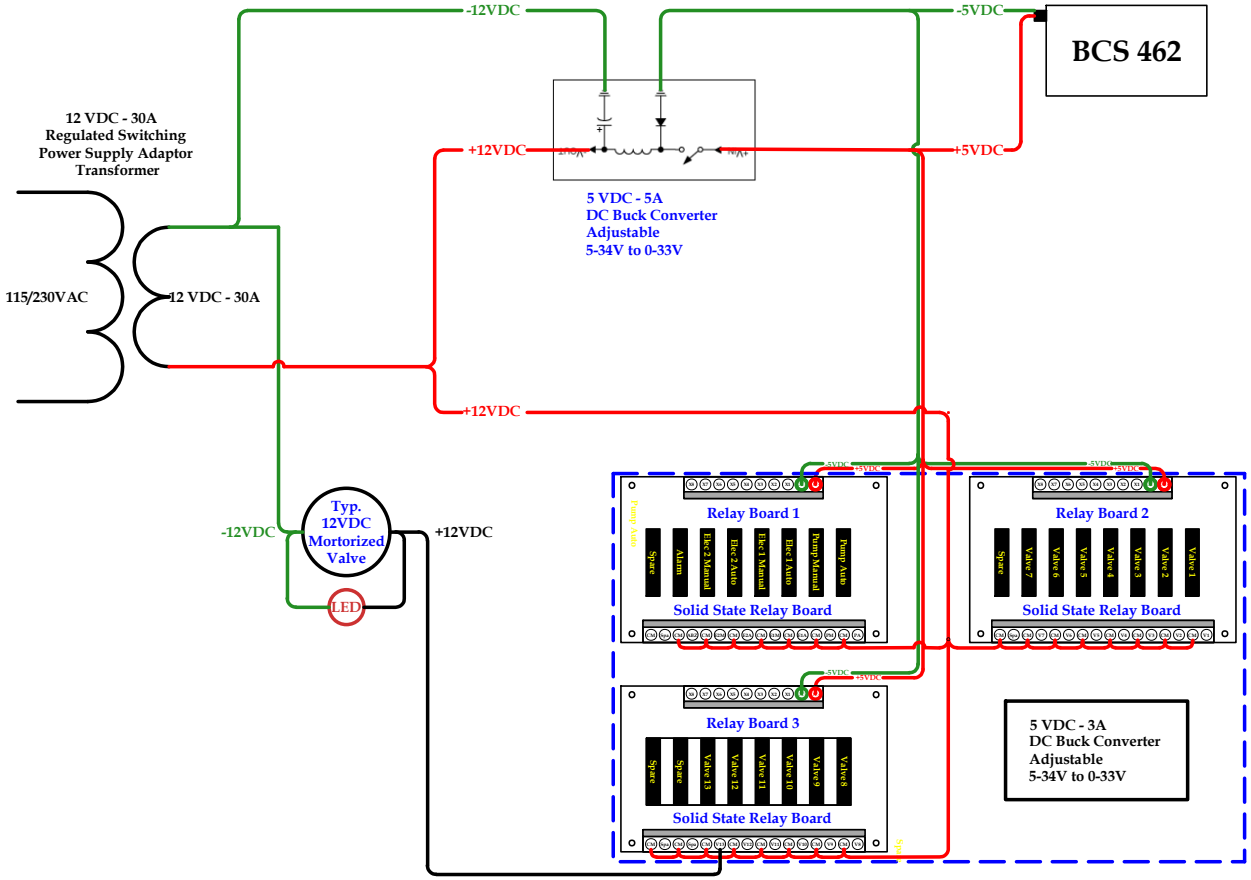

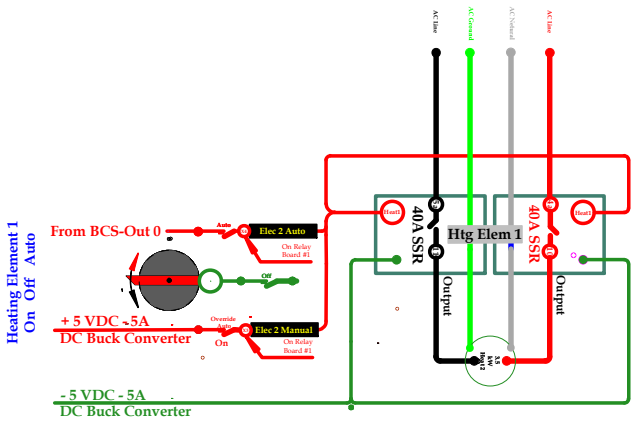

Typical Wiring for Auto/Off/Manual Switching for Pump and 2 Electrical Heating Elements